PRODUCT SHEET

Description:
Invisible Pivot Hinge F/Slat, 360DG Rotation, SS201, 57x16x 1,8mm, Incl. 4 SS-201 Screws M4x19mm, Sold pr. Pair,, Steel, Ideal for Room Dividers or Cabinet Doors

Item number:
15.08.190-0

Units	Box	Carton	HS Code	Barcode
Pair	1	250	8302100090	5704866056045

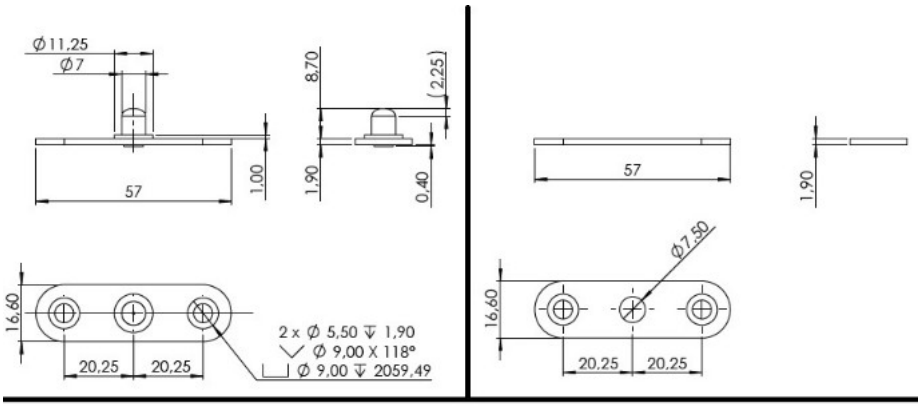

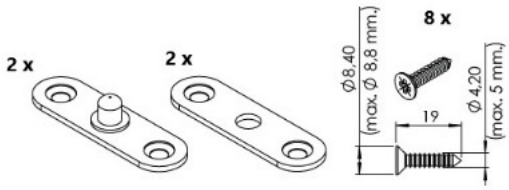

SISO A/S
Mileparken 11
DK-2740 Skovlunde
Denmark
VAT: DK24786013

Phone +45 45 830 900

www.siso.dk
siso@siso.dk

Danske Bank
Nytorv Branch
Copenhagen
SWIFT: DABADKKK

Account no.
4180 3112 112936
IBAN Account
DK7230003112112936